ARPV-DR24050 (24V, 2A, 50W)

Dimension

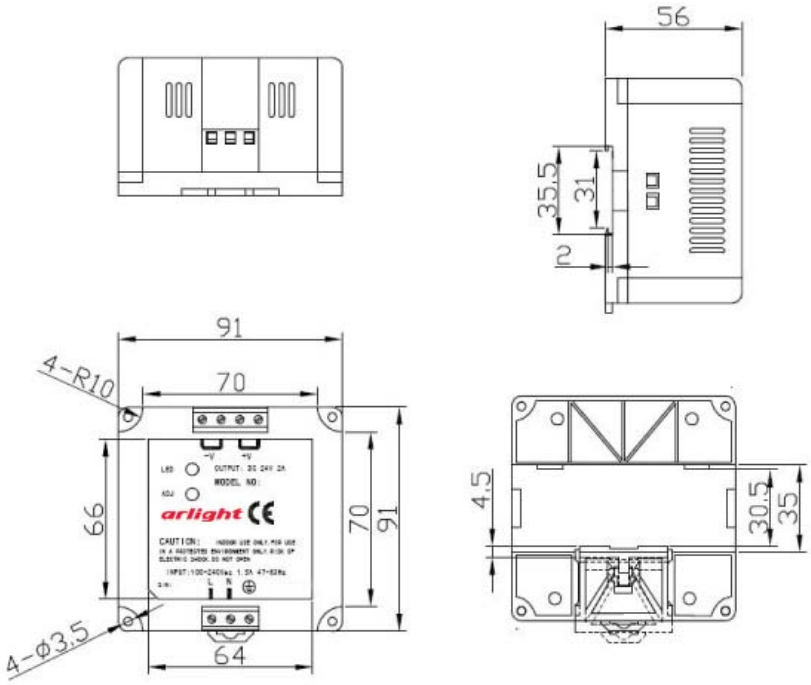

Special Features

- Universal AC input
- High efficiency
- Low output ripple
- Built-in EMI filter
- Short circuit protection
  Over load protection

Isolation

Input to output: AC1.5 KV/1 min.

Safety approval CE CCC

Input

Input range	100 ~ 240 VAC
Input frequency	47~ 63 Hz
Inrush current	<20A at 115VAC; <40A at 230VAC; cold start at 25°C
Input current	2.5A Max
Leakage current	<1.5 mA at 50/60 Hz 240VAC input

Output

Rated output power	50 Watts
Output voltage	24V±5%
Output current	2.0A
Output load efficiency	≥80% at 100VAC full load
Max power	55 Watts for convection
Adjustment range	40W~55W
Hold-up time	30 ms at full load and 230 VAC nominal line
OL protection	96% to 104% above peak rating
Ripple & noise	≤200mV at rated load

Environmental

- Operating temp.: 0 to 50°C ambient derate each output at 4.0% per degree from 50 to 60°C
- Storage temp.: - 40°C to 85°C
- Operating humidity: 5% to 95% (non-condensing)
- MTBF 100,000 hours at full load and 25°C ambient conditions (demonstrated)
- Size: 91x91x56mm